Description:
Marque de l'article: DumboRC
Numéro d'article: X4 (émetteur),X6F (récepteur)
Nom de l'article: émetteur
Matériau: plastique et métal
Couleur: bleu et or
Taille du produit: 160*100*205mm
Taille du récepteur: 35*20*13mm
Batterie: 4X AA (non incluse)
Spécification:
Canal: 4CH
Convient pour: modèle de réservoir de bateau de voiture Rc, tel queJjrc q65,Mn-90Et ainsi de suite
Mode de Modulation: gfskmode de diffusion: FHSS 67 canaux fréquence pseudo-aléatoire saut Distance de contrôle: 400-500 mètres plage de tension de la télécommande: 4.8-12v courant de fonctionnement de la télécommande: plage de tension: 3.3-10v courant de fonctionnement du récepteur: 30mARF puissance: <20 dbmrésolution des données: 4096 niveaux, 0,5us par niveau alarme de tension: 7.4v | 4.8v fréquence de transmission: bande ISM 2.4GHz (2400MHz ~ 2483.5MHz)Support récepteur: X6F/X6FG

Emballage inclus:
1X émetteur
1X récepteur
1X manuel

Display

DUMBORC
OFF
ON
DUMBORC

Features:

1. 2.4G technology, FHSS 67 channels frequency-hopping spread spectrum, highly resistant to anti-jamming.
2. Receiver response time is 3mS, ensuring a fast response and better control.
3. Smooth and highly sensitive to control inputs and stable at distances from 400-500m.
4. Compatible with a variety of vehicles; suitable for RC cars, RC boats and RC tanks.
5. With brake and fail safe, out of control protection function.
6. Each of the 3 channels can be set respectively, supporting mixed control of 1 and 2 channels.
7. Voltage range of the transmitter: 4.8V-12V(support 1s-3s), automatic identification of voltage, low voltage warning: 7.4V/4.8V
8. Voltage range of the receiver: 3.3V-10V, working current 30mA, supports high voltage servos.
9. The unique throttle speed limit adjustment function, allows beginners to practice at a safe speed.

Channel function

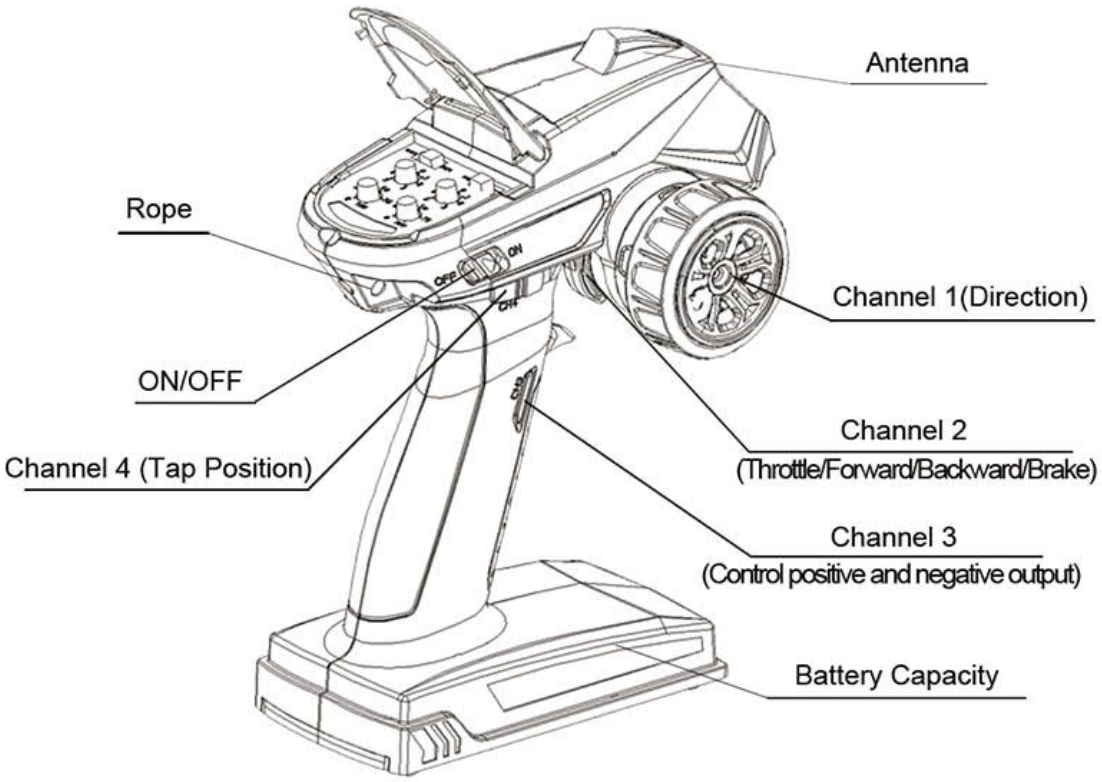

SIZE：160*100*205MM

CH1:Reverse for steering
CH1:Sub-trim for steering
CH1:EPA for steering
CH2:Reverse for throttle
CH2:Sub-trim for throttle
CH2:EPA for throttle
NOR
REV
DUMBO

Simulator interface /PPM signal interface
USB power supply mouth(power supply is limited to 5V only,otherwise the product will be burnt out)

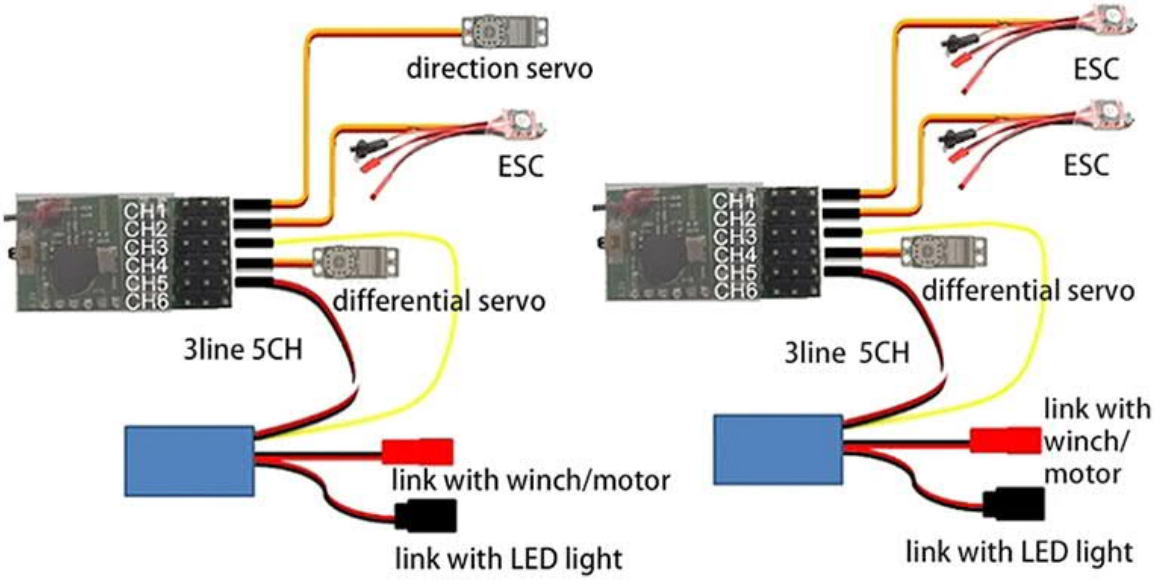
direction servo
ESC
CH1
CH2
CH3
CH4
CH5
CH6
differential servo
3line 5CH
link with winch/motor
link with LED light
ESC
ESC
CH1
CH2
CH3
CH4
CH5
CH6
differential servo
3line 5CH
link with winch/ motor
link with LED light

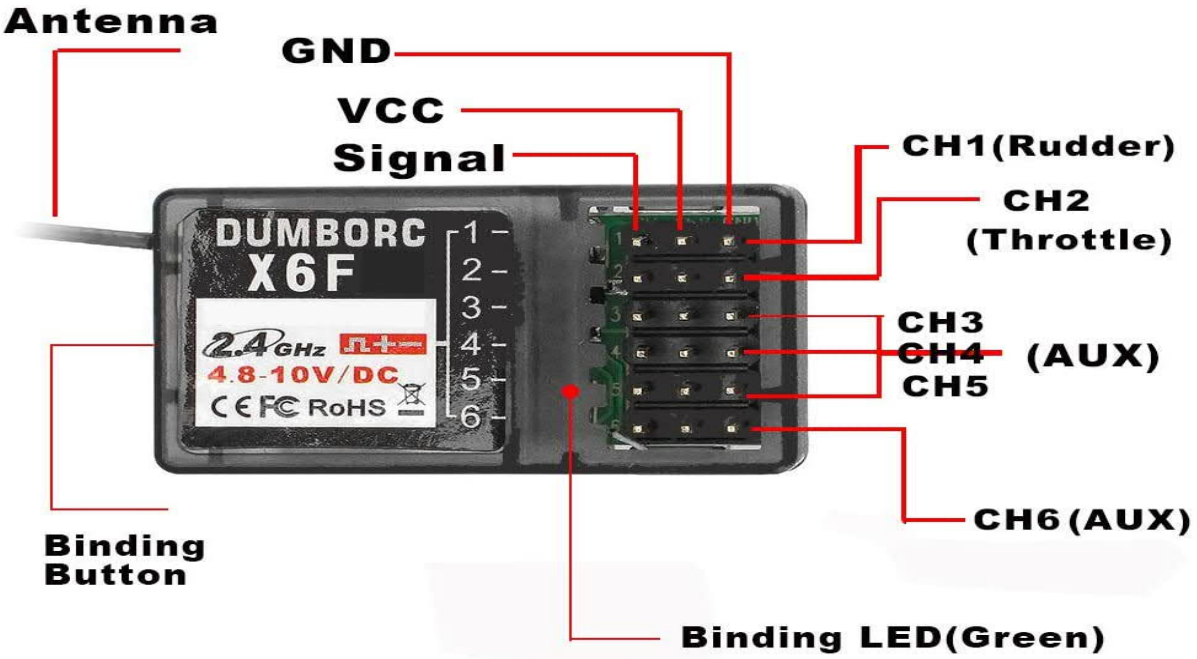

Mixed mode:

Connect the two ESC signal lines to the channel 1 and channel 2 of the receiver. under the mixed mode, the trigger moves backward and forward to control the rotation of the two motors. The positive and negative rotation of the motor can be set through the two positive and negative switches on the control panel.

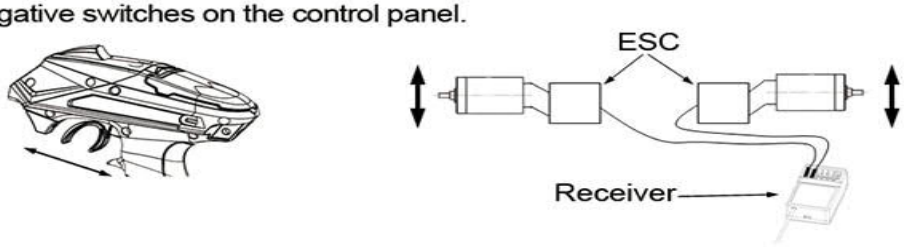

In the mixed mode, the RC model moves forward at a certain speed. At this time, the speed of the two motors can be adjusted by channel 1 directional wheel to realize differential steering.

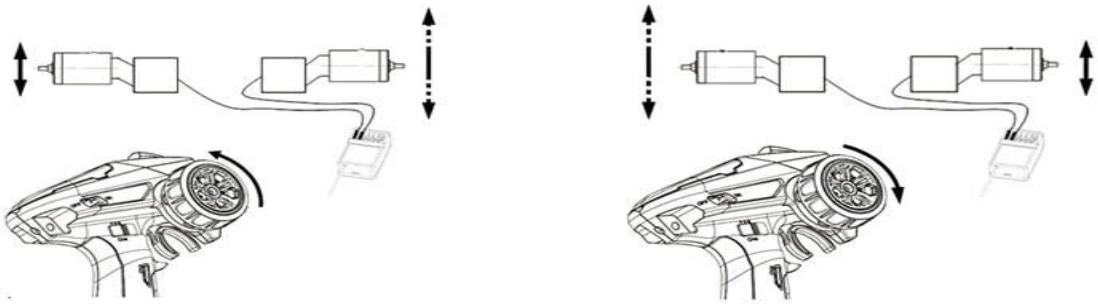

In the mixed control mode, the channel 1 and channel 2 pass forward and reverse direction, neutral point and motor route can be set separately.

OFF
ON
DUMBORC

DUMBORC